USED ON	DWG NO:
201 SERIES	WBN-201

REVISION

ZONE	REV	DESCRIPTION	ECN	DATE	APPR	ENGR
	A	INITIAL RELEASE	11-0000	1/10/11	RJ	WW

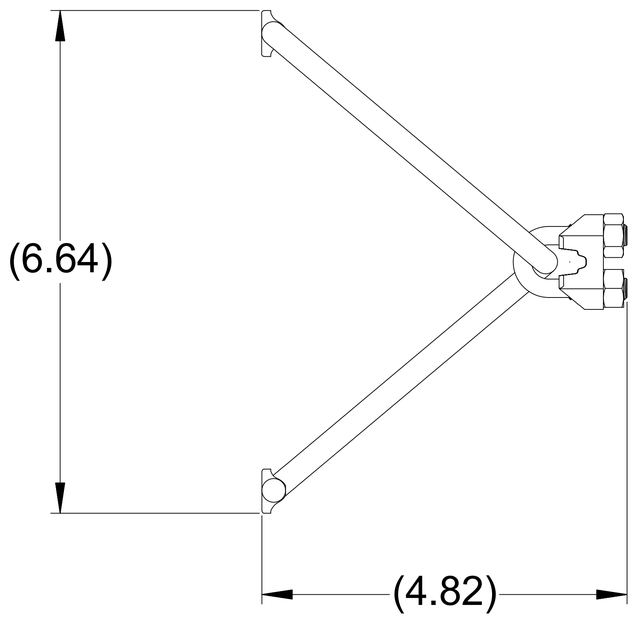

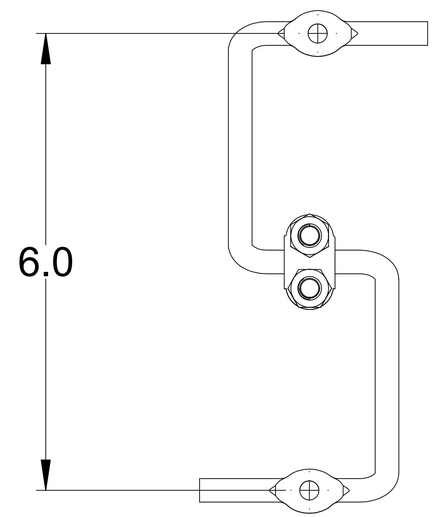

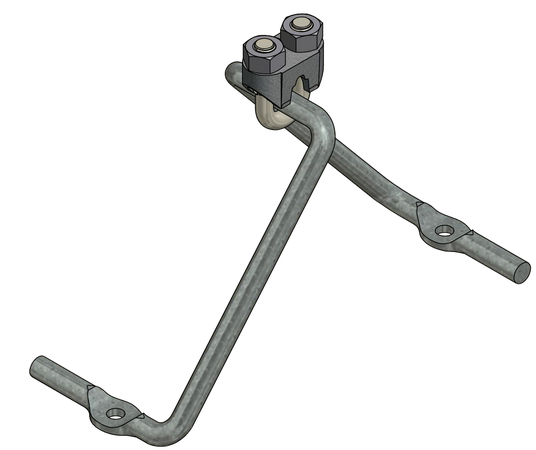

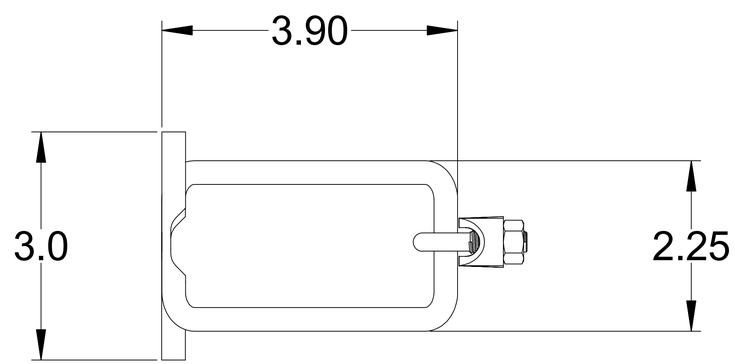

CONFIDENTIAL
THIS DRAWING IS THE SOLE PROPERTY OF, AND IS PROPRIETARY TO, CABLE MANAGEMENT SOLUTIONS, INC. THIS DRAWING AND/OR INFORMATION SHALL BE KEPT CONFIDENTIAL, AND MAY NOT BE REPRODUCTED, MODIFIED, DISCLOSED, OR MADE AVAILABLE TO OTHERS, WITHOUT THE EXPRESS WRITTEN CONSENT OF SNAKETRAY.

PATENTS
SNAKETRAY, SNAKE CANYON, WALL SNAKE AND LADDER SNAKE PRODUCTS ARE COVERED BY ONE OR MORE OF THE FOLLOWING PATENTS: #6,637,704, #6,463,704, #6,460,812, #6,449,912, #6,361,000, #6,347,493, #6,019,323, #5,953,870, #5,839,702 AND AUS #737,813

MATERIAL: GALVANIZED STEEL WIRE

FINISH: -

TREATMENT: NONE

ALL TOLERANCES IF NOT INDICATED ARE:
FRACTIONS= ± 1/32TH
.XX= ± .015
.XXX= ± .005
ANGLULAR= ± 1/2 DEGREE

DRAWN BY	M. RUDZ	DATE 1/10/2011
CHECKED BY	B. RENZ	DATE 3/12/2014
ENGINEERING	R. JETTE	DATE 3/12/2014

CABLE MANAGEMENT SOLUTIONS,INC.
291 SKIP LANE
BAY SHORE, NY 11706

TITLE: WALL MOUNT BRACKET FOR 201 SERIES, SINGLE

SIZE	USED ON	DWG NO	SCALE	RELEASE DATE	SHEET	REV. NO
D	201 SERIES	WBN-201	NONE		1 OF 1	A