			DWG NO:	TO - "X"		
REVISION						
ZONE	REV	DESCRIPTION	ECN	DATE	APPR	ENGR
	A	INITIAL RELEASE	10-0000	3/18/2010	RJ	WW

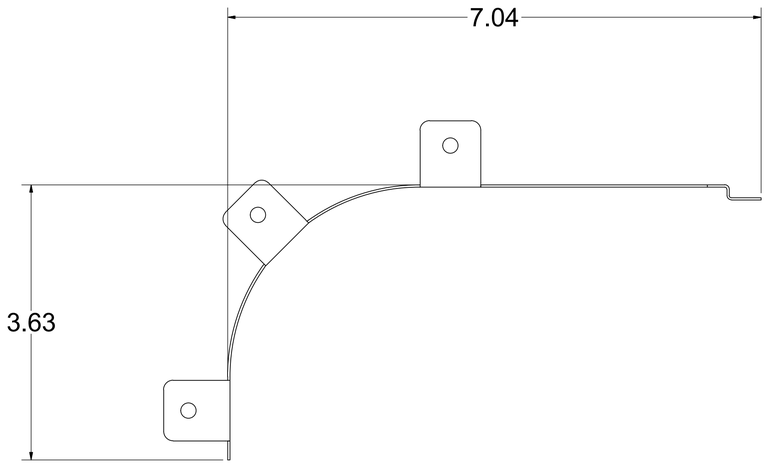

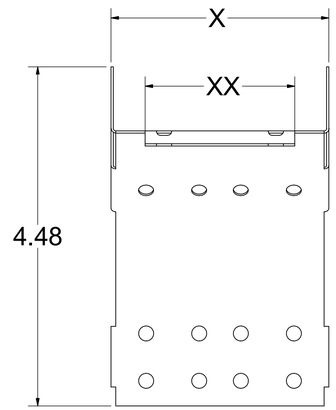

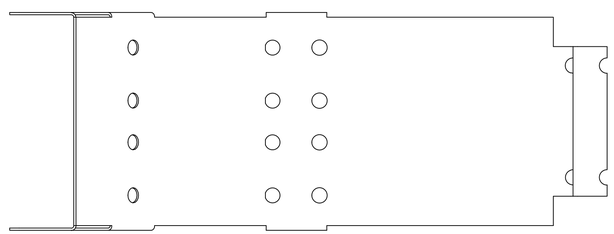

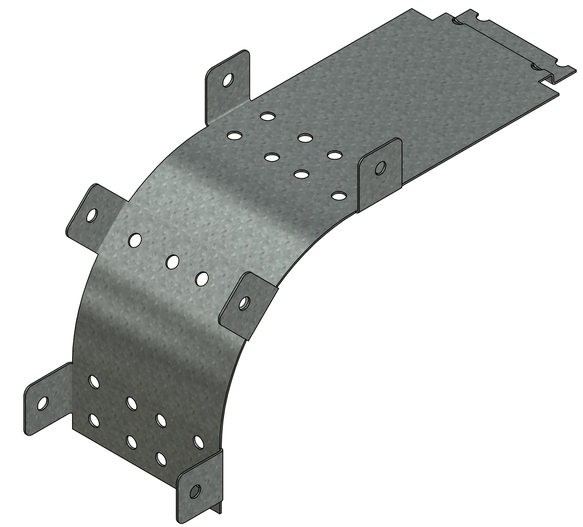

PN #	DESCRIPTION	DEVELOPED LENGTH	DIM " X "	DIM " XX "
TO-2	2" CABLE DROP OUT WATERFALL	3.515 x 9.680	1.875	0.975
TO-3	3" CABLE DROP OUT WATERFALL	4.515 x 9.680	2.875	1.957
TO-425	4-1/4" CABLE DROP OUT WATERFALL	5.765 x 9.680	4.125	3.225
TO-5	5" CABLE DROP OUT WATERFALL	6.515 x 9.680	4.875	3.975
TO-6	6" CABLE DROP OUT WATERFALL	7.515 x 9.680	5.875	4.975

CONFIDENTIAL

THIS DRAWING IS THE SOLE PROPERTY OF, AND IS PROPRIETARY TO, CABLE MANAGEMENT SOLUTIONS, INC. THIS DRAWING AND/OR INFORMATION SHALL BE KEPT CONFIDENTIAL, AND MAY NOT BE REPRODUCTED, MODIFIED, DISCLOSED, OR MADE AVAILABLE TO OTHERS, WITHOUT THE EXPRESS WRITTEN CONSENT OF SNAKETRAY.

PATENTS

SNAKETRAY, SNAKE CANYON, WALL SNAKE AND LADDER SNAKE PRODUCTS ARE COVERED BY ONE OR MORE OF THE FOLLOWING PATENTS: #6,637,704, #6,637,165, #6,463,704, #6,460,812, #6,449,912, #6,361,000, #6,347,493, #6,019,323, #5,953,870, #5,839,702 AND AUS #737,813.

MATERIAL: GALVANIZED STEEL SHEET

FINISH: -

TREATMENT: NONE

ALL TOLERANCES IF NOT INDICATED ARE:
FRACTIONS= ± 1/32TH
.XX= ± .015
.XXX= ± .005
ANGLULAR= ± 1/2 DEGREE

DRAWN BY: M Rudz	DATE: 10/25/2010
CHECKED BY: B. RENZ	DATE: 3/12/2014
ENGINEERING: R. JETTE	DATE: 3/12/2014

CABLE MANAGEMENT SOLUTIONS,INC.
291 SKIP LANE
BAY SHORE, NY 11706

TITLE: CABLE DROP OUT WATERFALL

SIZE	USED ON	DWG NO	SCALE	RELEASE DATE	SHEET	REV. NO
D	CM 201 SERIES	TO - "X"	NONE		1 OF 1	A