ST 201

UNDER FLOOR MOUNT BRACKET FOR SINGLE POCKET SNAKE TRAY®

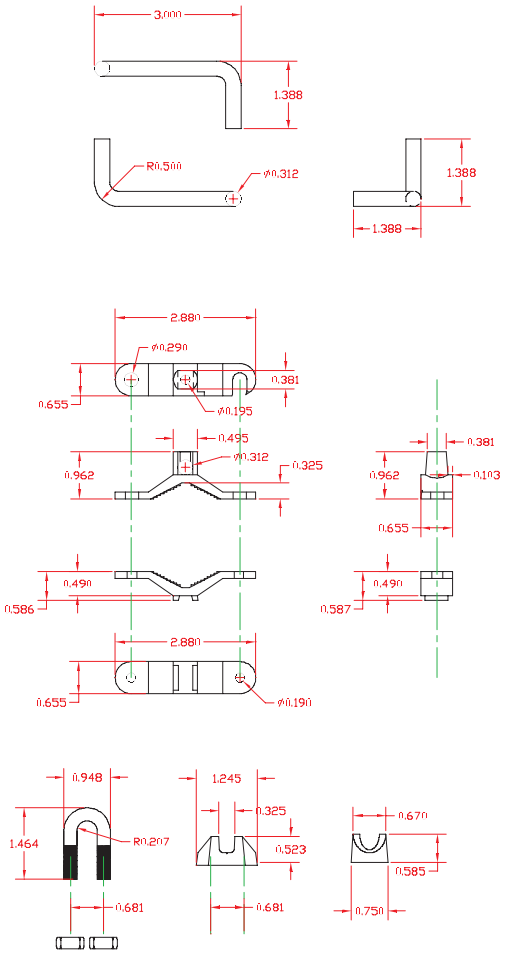

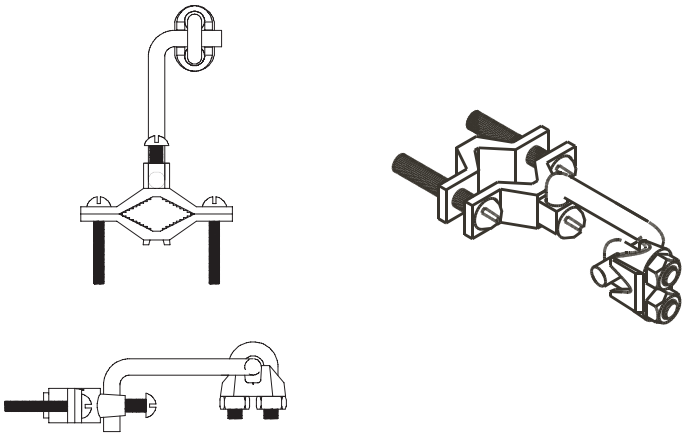

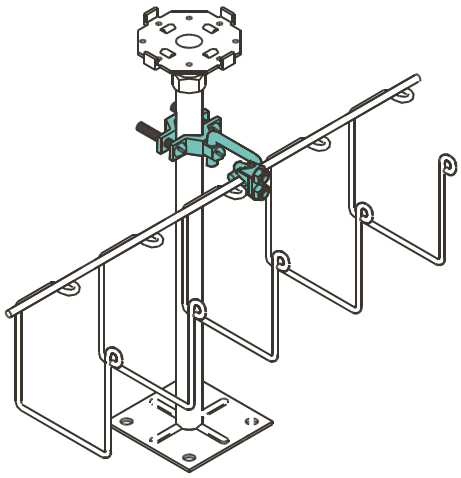

Part Number	Physical Dimensions		Wt	Finish
	Height (A)	Width (B)		
ST-201	2"	5.50"	0.6#	PG

Used to attach all single pocket 201 series Snake Tray® to the floor pedestals utilized in the construction of raised access floors.

Snake Tray® and Snake Canyon® products are covered by one or more of the following patents: #6,637,704, #6,637,165, #6,463,704, #6,460,812, #6,449,912, #6,361,000, #6,347,493, #6,019,323, #5,953,870, #5,839,702 and AUS #737,813. Other US and Foreign Patents Pending.

800-308-6788 • info@snaketray.com • www.snaketray.com