Snake Tray
291 Skip Lane
Bay Shore, NY 11706 USA
T: 800-308-6788
F: 800-881-6641

SECTION 26 XX XX
MODULAR WIRING SYSTEM

Part 1. GENERAL:

1.1 SECTION INCLUDES:

A The work under this section shall consist of the furnishing of all necessary material, labor and associated services required to complete the installation of the modular wiring system as shown on the drawings.

B The modular wiring system shall ensure the electrification and delivery of power from the conventional power panels to workstations and or equipment at any location using prefabrication modular components allowing for total plug-n-play capability.

1.2 RELATED SECTIONS:

A Section XX XX XX – Access floors
B Section XX XX XX – Systems Furniture
C Section XX XX XX – Basic Electrical Materials and Methods
D Section XX XX XX – Wiring Methods

1.3 REFERENCES:

A UL 183 – *Manufactured Wiring Systems*
B NFPA 70 – *National Electrical Code*
C Article 604 – *Manufactured Wiring Systems*
D Article 645 – *Information Technology Equipment*

1.4 QUALITY ASSURANCE:

A National Electric Code Compliance: Comply with all NEC articles that apply to construction and installation practices applicable to this section
B American National Standards Institute: Comply with all ANSI articles that apply to construction and installation practices applicable to this section
C NRTL Compliance: Provide products that are NRTL-classified.

1.5 DRAWINGS:

A The drawings included as part of the specifications show the approximate location and routes of all system components and all connected receptacles. The data presented on the drawings is as accurate as obtainable surveys can determine. Accuracy is not guaranteed and field measurements and verifications are required.

1.6 SUBMITTALS:

A Comply with requirements of Section 01XXX – Submittal Procedures.
B Product Data: Submit manufacture's product data, including NRTL-classifications.
C Shop Drawings: Submit shop drawings indicating materials, finish, dimensions and accessories. Show layout, support and installation details.

1.7 DELIVERY STORAGE AND HANDLING:

A Delivery: Deliver materials to site in manufacturer's original un-opened containers and packaging, with labels clearly indicating manufacturer and material.
B Storage: Store materials in a dry area indoors, protected from damage and in accordance with manufacturer's instructions.
C Handling: Protect materials and finishes during handling and installation to prevent damage.

Part 2. PRODUCTS:

2.1 ACCEPTABLE MANUFACTURES:

A The Snake Bus system shall be manufactured by Cable Management Solutions, 291 Skip Lane, Bay Shore, NY 11706. Other manufactures can only be considered equal if, in the opinion, and the written approval of the Senior Project Engineer, they meet all the performance and design standards specified herein.

2.2 GENERAL SYSTEM REQUIREMENTS

A Maximum rated Current: 50 amperes
B Maximum rated Voltage: 480Y/277 Volts
C Frequency: 50/60 Hertz
D Conditional short circuit rating: 16 KA
E Number of copper conductors: 5
F Conductor cross sectional area: 3.3 AWG
G Cable Termination Capacity: 6 AWG
H Configurations
  1 Three individually phased circuits; phase to shared neutral, one standard ground and one isolated/dedicated circuit, 120/208V, 480Y/277V.
  2 Two circuits each with one neutral and sharing one ground and one isolated/dedicated circuit, 120/208V, 480Y/277Z.
I Power connector keying: Connectors for any cabling system will be keyed as to prevent mixing of voltages.
J All floor boxes and Accessory boxes shall be available as both empty, suitable for field wiring and fully wired with color coded outlets and keyed bus interface whip connector.
K System must provide means of external quick connect/disconnect, circuit distribution from one distribution device and cabling systems.

2.3 FEED MODULE:

A 18 gauge galvanized steel box
B Hinged access cover
C Surface mounting tabs
D 5 copper bus bars
E Polycarbonate LSF interface block for power track connections
F Terminal block for power connections up to 6AWG
G General ground stud
H Isolated/dedicated ground circuit
I Fitted with ¾" conduit knockouts as required by cabling layout.
J Label to identify phasing, amperage and voltage
K Dimensions: 3-3/4"[94mm] wide x 1-1/2"[38mm] deep X 10-5/8"[265mm] long

L Part Number: CM 707-50-FM, 50AMP Snake Bus Feed Module, 3-3/4" wide x 1-1/2" deep X 10-5/8" long

2.4 BUS TRACK:

A 20 gauge galvanized steel casing
B Adjustable mounting tabs

C 5 copper bus conductors
D Polycarbonate LSF sockets/joint moldings/shutters
E Dust and debris cover
F Isolated/dedicated ground circuit
G Integrated safety shutters
H Quick connect/disconnect design with positive locking tabs
I Label to identify phasing, amperage and voltage
J Dimensions: 2-¾”[70mm] wide X 7/8”[22mm] deep X 48”[1200mm], 96”[2400mm] long
K Part Number: CM 707-50-4-4, Surface mount Snake Bus, 2-¾” wide X 7/8” deep X 48” long
CM 707-50-8-8, Surface mount Snake Bus, 2-¾” wide X 7/8” deep X 96” long

2.5 POWER WHIPS:

A Flexible conduit UL1063 Type MTW
B Carrying conductors of No. 12AWG[20 AMP], No. 10AWG[30 AMP] multi-strand wire, co-labeled as THHN and T90, 90-degree C, 600-volt insulation, compliant with NEC, Article 604
C Polycarbonate LSF molded plug head, silver-plated high conductive brass blade connectors
D Integrated ground conductor
E Quick connect/disconnect design with positive locking tabs
F Equipment ground conductor
G Label to identify phasing, amperage and voltage

2.6 SYSTEMS FURNITURE INTERFACE:

A Description: Modular interface box that connects most major manufactures systems furniture to the power distribution system.

B Junction box square shaped
C Surface mount
D 20 gauge galvanized steel casing
E Removable cover
F Maximum 4 pre-installed UL Listed circuit breakers providing four separate isolated circuits maximum of 30 AMP per circuit
G Integrated terminal block for connecting systems furniture feed cables (supplied by others)
H Fitted with quick disconnect phased power whip

I Finish: Electrostatic epoxy powder coat

J Dimensions: 5-1/2”[140mm] wide X 2”[50mm] deep X 5-1/2”[140mm] long

K Part Number: CM 707-50-Box23, Surface mount furniture interface box

2.7 INTERLINK MODULE:

A Description: Used when changing directions and or adding extensions where tap off locations are not necessary.

B 18 gauge galvanized steel box
C Hinged access cover
D Surface mounting tabs
E 5 copper bus bars
F Polycarbonate LSF interface block for power track connections
G General ground stud
H Isolated/dedicated ground circuit
I Fitted with ¾” conduit knockouts as required by cabling layout.
J Fitted with flexible conduit UL1063 Type MTW
K Label to identify phasing, amperage and voltage

L Dimensions: 3-3/4”[94mm] wide x 1-1/2”[38mm] deep X 10-5/8”[265mm] long

M Part Number: CM 707-50-IL, 50AMP Snake Bus Interlink Module

2.8 RAISED FLOOR BOXES:

A Description: Self contained units providing both power and voice/data chamber. The voice/data portion of the box is modular and allows for quick modifications of services. Allowing for both field and factory modifications and terminations.

B Flush Mount
C Two completely separate chambers, one for data and one for power
D 16 gauge galvanized steel body with ½" knockouts
E 16 gauge galvanized steel power panels, modular design, designed to accommodate up to 8 power receptacles and 4 UL Listed circuit breakers.
F Integrated circuit breaker guards
G 16 gauge galvanized steel data panels, modular design, designed to accommodate up 4 modular data faceplates from most major manufacturers of voice and data products.
H Integral hinged high-density plastic cover with 16 gauge steel plate and carpet recess.
I Secured to floor with adjusting screws
J Removable and reconfiguarble data module
K Fitted with quick disconnect phased power whip

L Dimensions: 8-3/4"[220mm] wide X 5-1/4"[132mm] deep X 12-7/16"[186mm] long

M Part Number: CM 707-XX-X-XX-XX-XX-X-XXX-XXXX

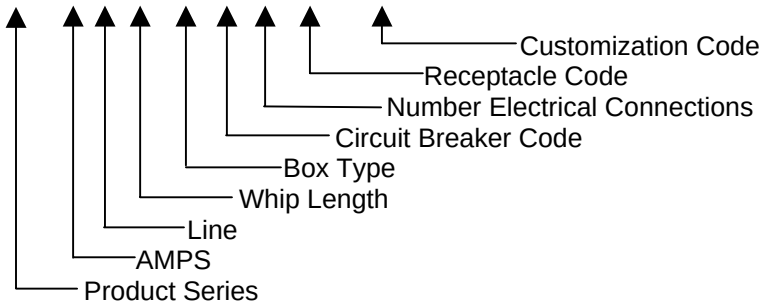

Refer to manufacturer for complete description and ordering procedures

2.9 ACCESSORY ELECTRICAL BOXES:

A Description: Self contained power satellite to provide additional power where necessary.

B Self contained unit
C 16 gauge galvanized steel body with ½" knockouts
D Fitted with quick disconnect phased power whip, single pole; two pole; three pole configurations
E Capacity: Maximum of three independently UL: Listed breaker controlled circuits [15-amp] [20-amp] [30-amp] or combinations of all
F Integrated circuit breaker guard

G Finish: Electrostatic epoxy powder coat

H Part Number: CM 707-XX-X-XX-XX-XX-X-XXX-XXXX

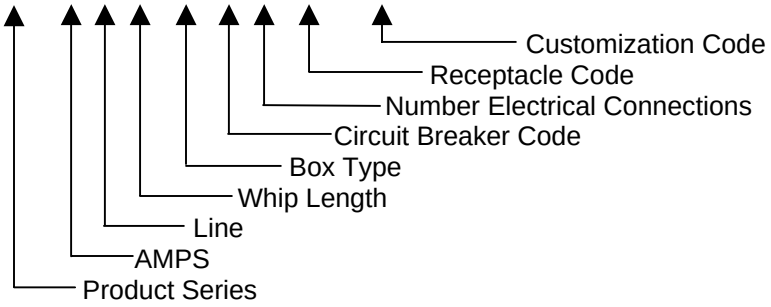

Refer to manufacturer for complete description and ordering procedures

Part 3. EXECUTION:

3.1 Examination:

A Examine areas to receive modular wiring system. Notify the Engineer of conditions that would adversely affect the installation or subsequent utilization of the system.
B Do not proceed with installation until unsatisfactory conditions are corrected.

3.2 Installation:

A Install modular wiring in accordance with recognized industry practices, to ensure that the modular wiring equipment complies with requirements of the NEC, and applicable portions of NFPA 70B and NECA's "Standards of Installation" pertaining to general electrical installation.

3.3 Installation practice:

A Coordinate installation with other trades.
B Field verification is required before installation.
C Install modular wiring system at locations indicated on the drawings and in accordance with manufacturer's instructions.
D Install modular wiring system straight unless noted on the construction drawings.

END OF SECTION